Customer Information Sheet

DRAWING No.: M80-565XX05 SHEET 2 OF 2	IF IN DOUBT - ASK	©	NOT TO SCALE	THIRD ANGLE PROJECTION	ALL DIMENSIONS IN mm

SPECIFICATIONS:
- MATERIAL:
  - MOULDING = GLASS-FILLED PPS, UL94V-0, BLACK
  - CONTACT = COPPER ALLOY
  - JACKSCREW = STAINLESS STEEL
- FINISH:
  - CONTACTS = 0.25-0.3µ GOLD
- ELECTRICAL:
  - CURRENT RATING AT 25°C = 3.0A MAX
  - CURRENT RATING AT 85°C = 2.2A MAX
  - WORKING VOLTAGE = 800V AC/DC
  - VOLTAGE PROOF = 1200V AC/DC
  - CONTACT RESISTANCE = 25mΩ MAX
  - INSULATION RESISTANCE = 100MΩ MIN
- MECHANICAL:
  - DURABILITY = 500 OPERATIONS
- ENVIRONMENTAL:
  - TEMPERATURE RANGE = -55°C TO +125°C
- PACKING:
  - LOOSE

FOR COMPLETE SPECIFICATION, SEE COMPONENT SPECIFICATION C005XX (LATEST ISSUE)

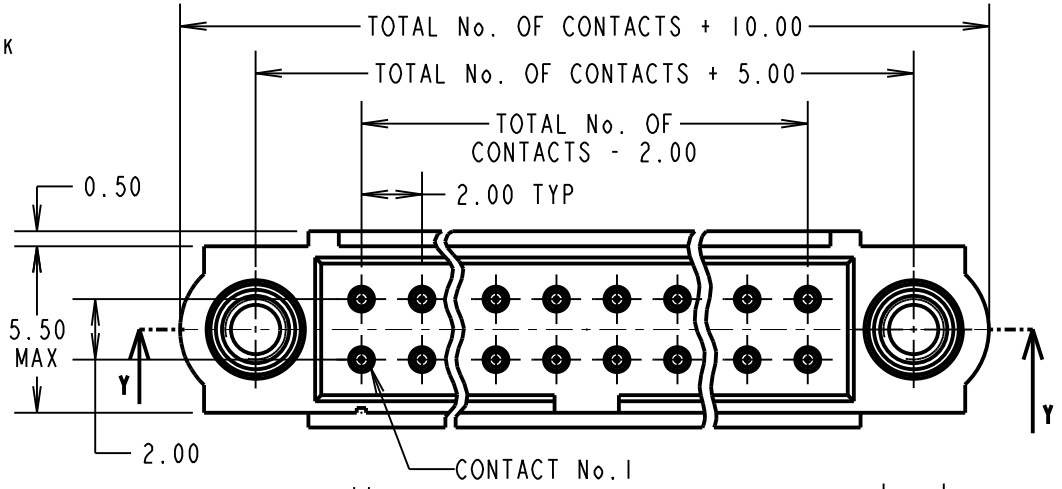

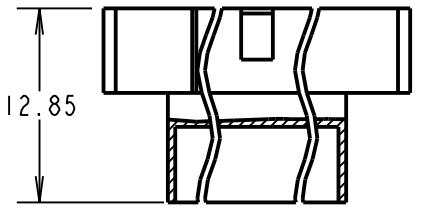

5mm POTTING WALL (M80-565XX05)

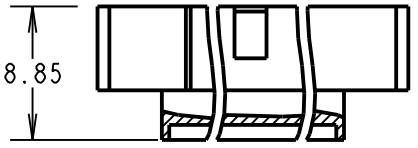

1mm POTTING WALL (M80-565XX05A)

ORDER CODE:

M80-565XX05X

TOTAL No. OF CONTACTS
06, 10, 14,
20, 26, 34,

POTTING WALL HEIGHT
BLANK = 5mm
A = 1mm

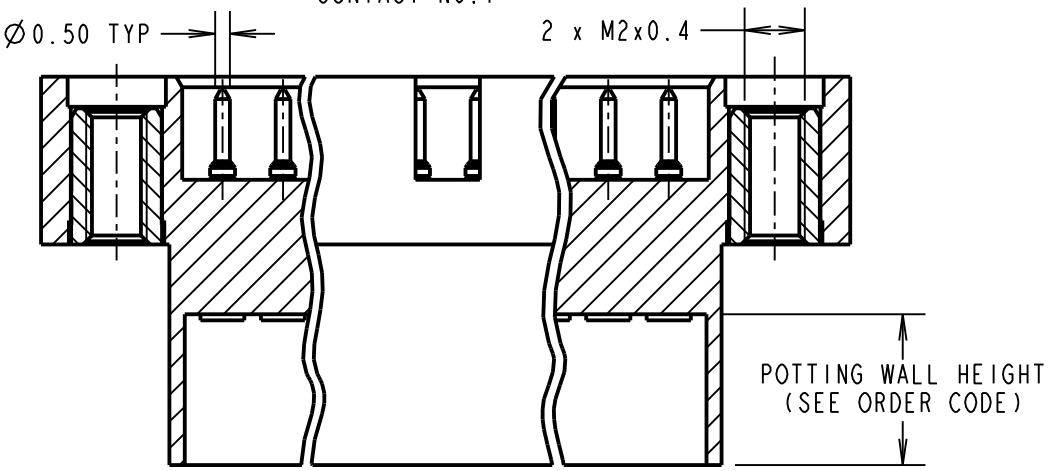

PART SECTION Y-Y

NOTES:
1. CONNECTORS ARE SUPPLIED WITH CONTACTS LOOSE.
2. FOR EXTRA CONTACTS, USE PART NUMBER M80-1940005.
3. RECOMMENDED WIRE TYPE = BS 3G 210 TYPE A, PTFE INSULATED 22 AWG. MAX INSULATION DIAMETER = Ø1.10mm, STRIP WIRE BY 2.00mm.
4. RECOMMENDED HAND CRIMP TOOL = M22520/2-01 WITH POSITIONER Z80-193. REFER TO TOOLING INSTRUCTION SHEET IS-01 FOR CRIMPING INSTRUCTIONS.
5. CONTACT INSERTION AND EXTRACTION TOOL = Z80-280. REFER TO TOOLING INSTRUCTION SHEET IS-25 FOR ASSEMBLY INSTRUCTIONS.

NAME	ISS.	DATE	C/NOTE
MSP	6	16.09.15	13088

APPROVED: M.PERREN
CHECKED: M.PLESTED
DRAWN: B. M. KENT
CUSTOMER REF.:
ASSEMBLY DRG:

HARWIN
www.harwin.com
technical@harwin.com

THIS DRAWING AND ANY INFORMATION OR DESCRIPTIVE MATTER SET OUT HEREON ARE CONFIDENTIAL AND COPYRIGHT PROPERTY OF THE HARWIN GROUP AND MUST NOT BE DISCLOSED, LOANED, COPIED OR USED FOR MANUFACTURING, TENDERING OR FOR ANY OTHER PURPOSE WITHOUT THEIR WRITTEN PERMISSION.

TOLERANCES
X. = ±1mm
X.X = ±0.50mm
X.XX = ±0.10mm
X.XXX = ±0.01mm
ANGLES = ±5°
UNLESS STATED

MATERIAL: SEE ABOVE
FINISH: SEE ABOVE
S/AREA: mm²

TITLE: DATAMATE J-TEK DIL MALE CRIMP (LARGE BORE) POTTING WALL ASSEMBLY

DRAWING NUMBER: M80-565XX05

SHT 2 OF 2